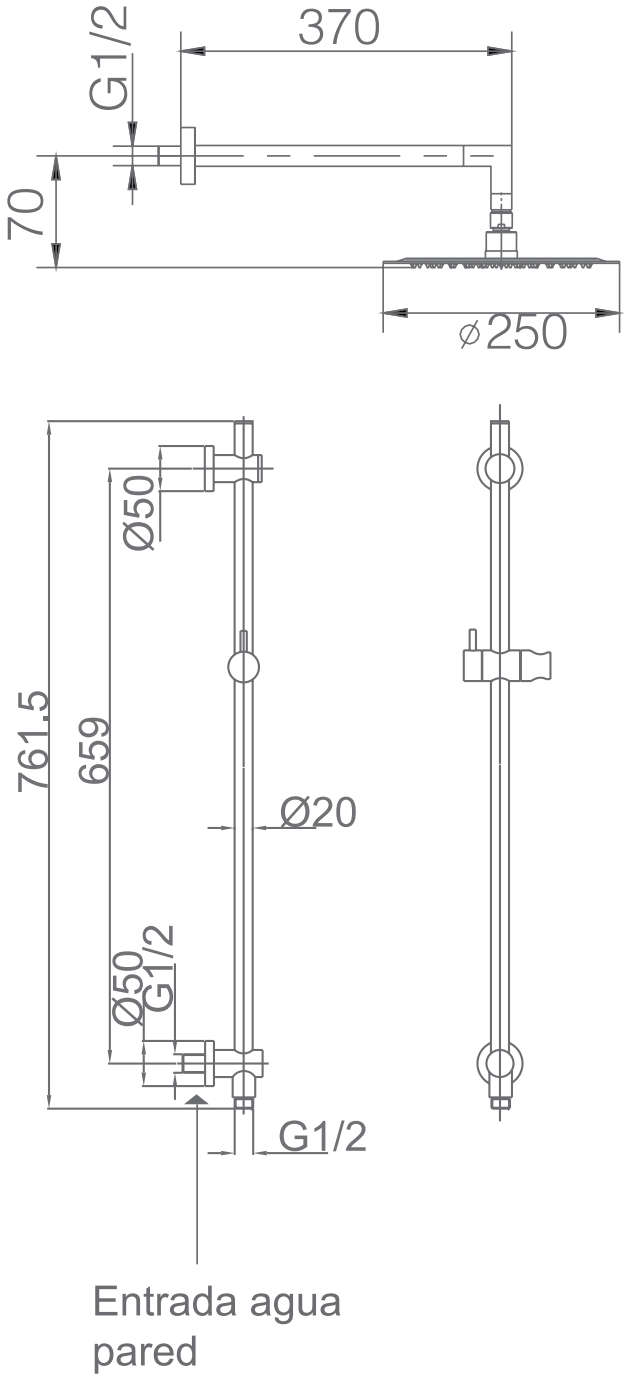

Ref. : **GPA015**