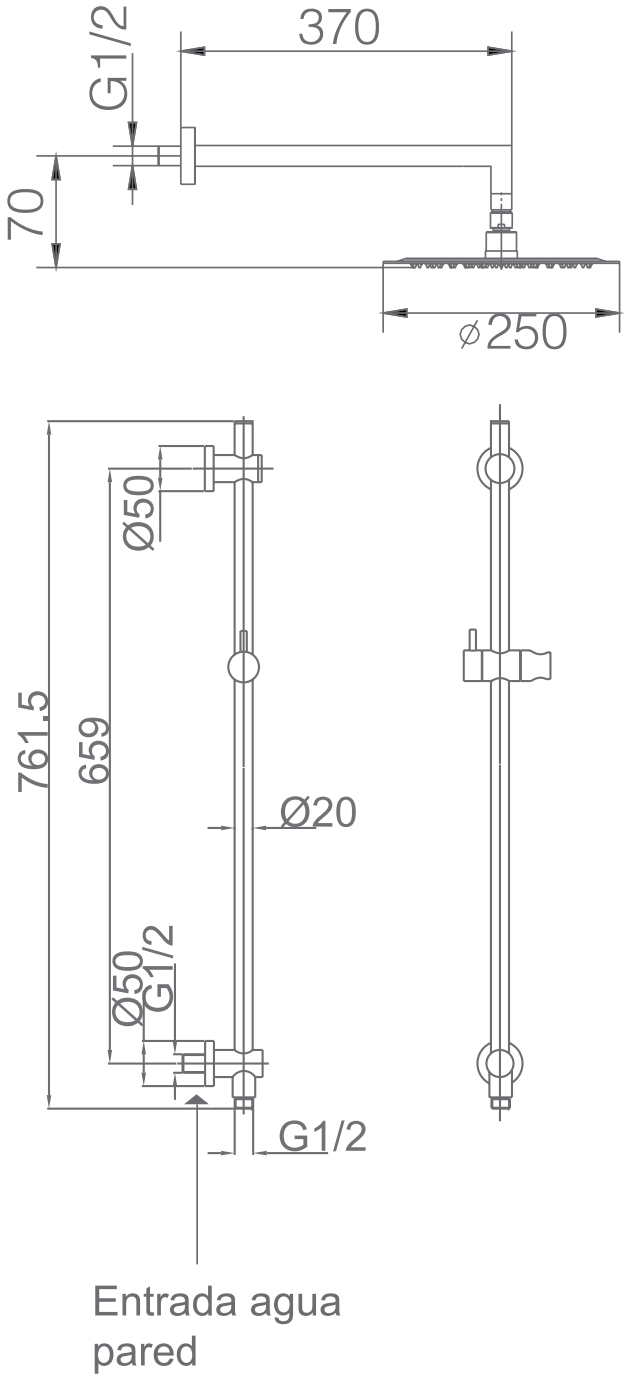

Ref. : **GPB022**