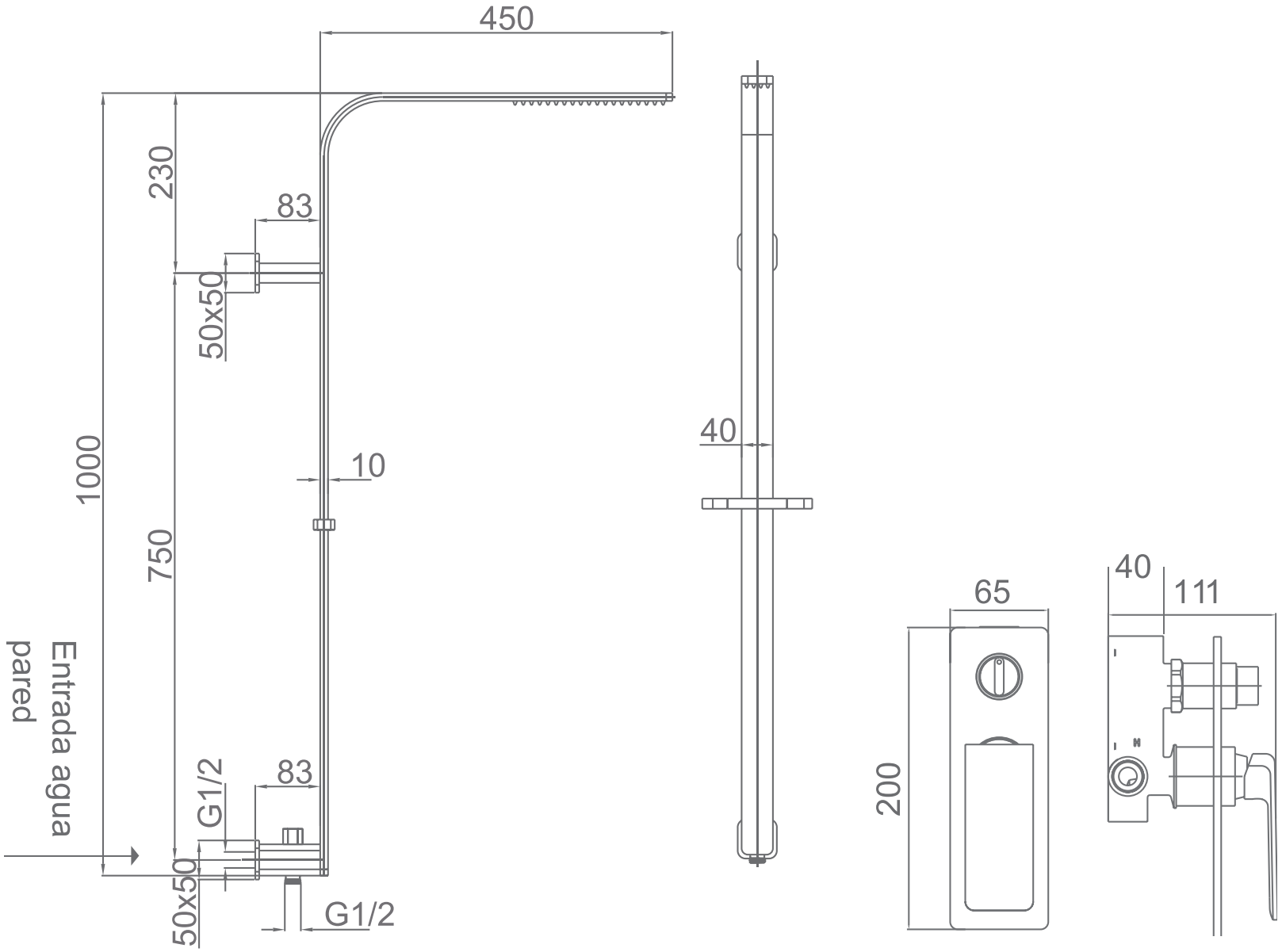

Ref. : **GPH016/CR**